# EZNoseLift Landing Gear Auto Extend Circuit
# w / Backup Battery Switch/Relay Actuation - Rev. 2a
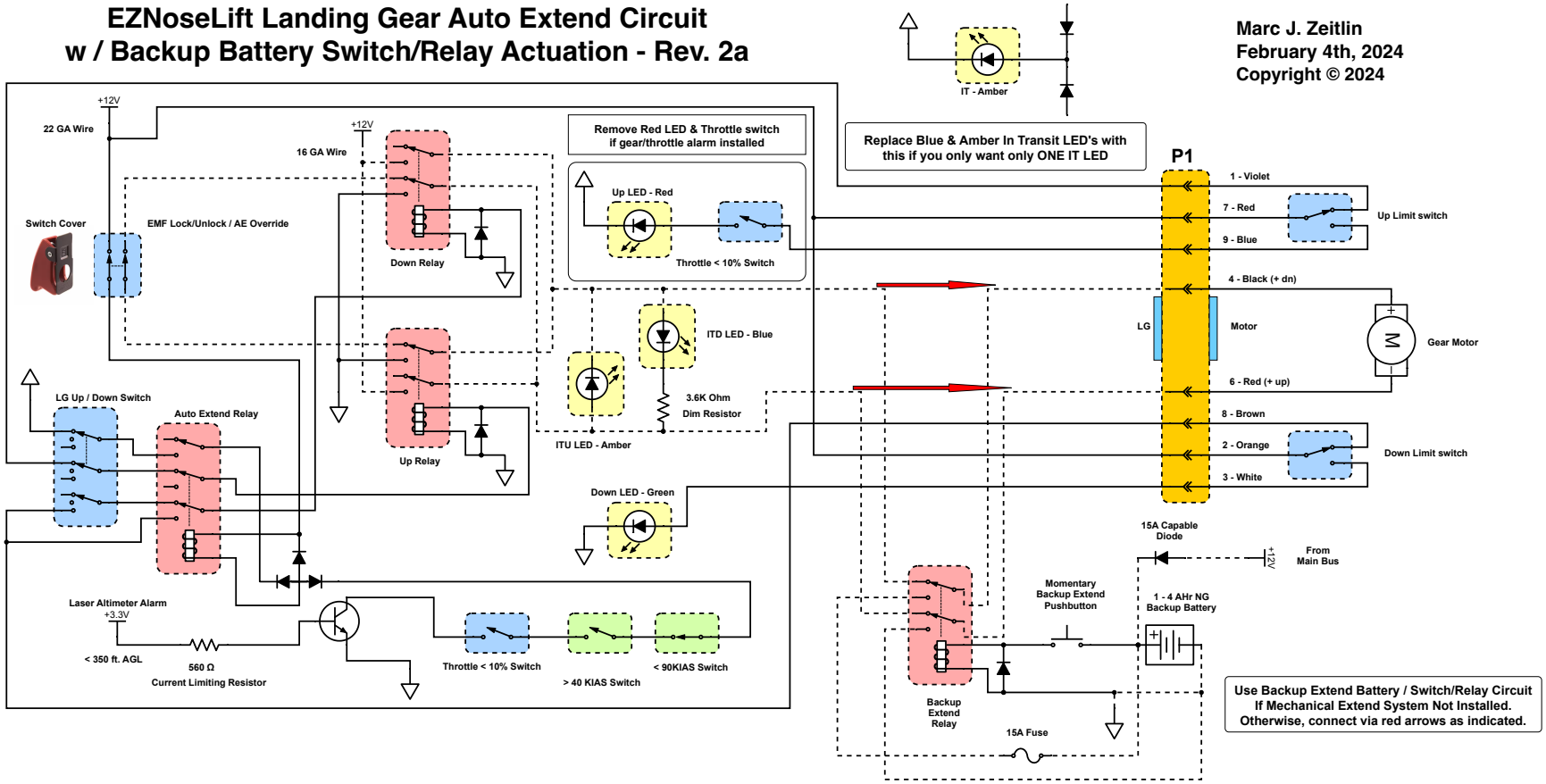
Marc J. Zeitlin
February 4th, 2024
Copyright © 2024